Process Plant Design & Economics

Jan-May 2026

Course Instructor: Dr. Sumit Kamal

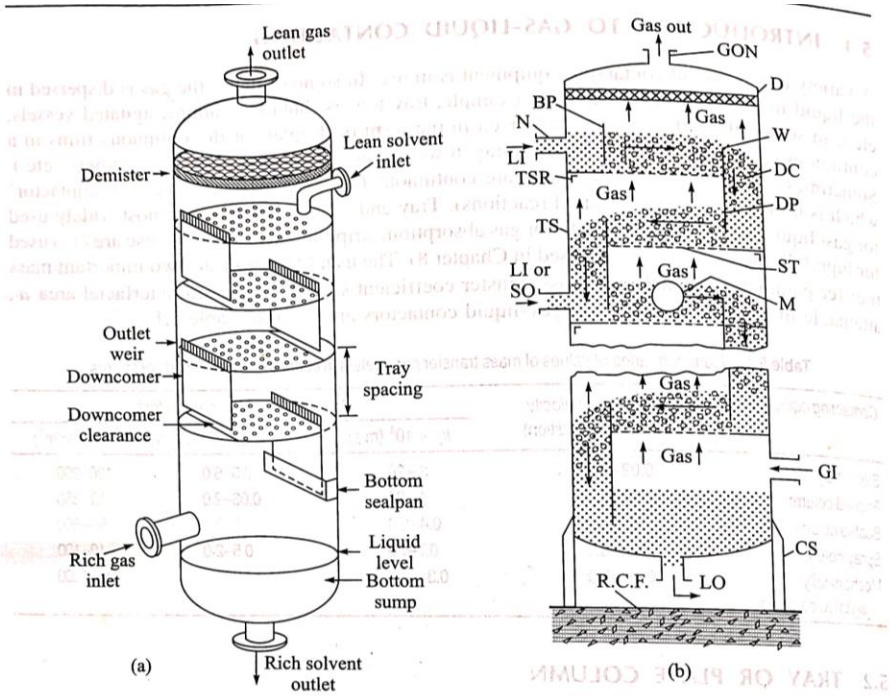

Figure 5.1 (a) Schematic of a 'sieve tray' column and (b) sectional sketch of a 'sieve tray' column [BP: baffle plate; CS: column support; D: demister; DC: downcomer; DP: downcomer plate; GI: gas inlet; GON: gas outlet nozzle; LI: liquid inlet; LI or SO: liquid inlet or side-stream outlet; M: manhole; N: nozzle: RCF: reinforced concrete foundation; ST: sieve tray: TS: tower shell; TSR: tray-support ring; W: weir].

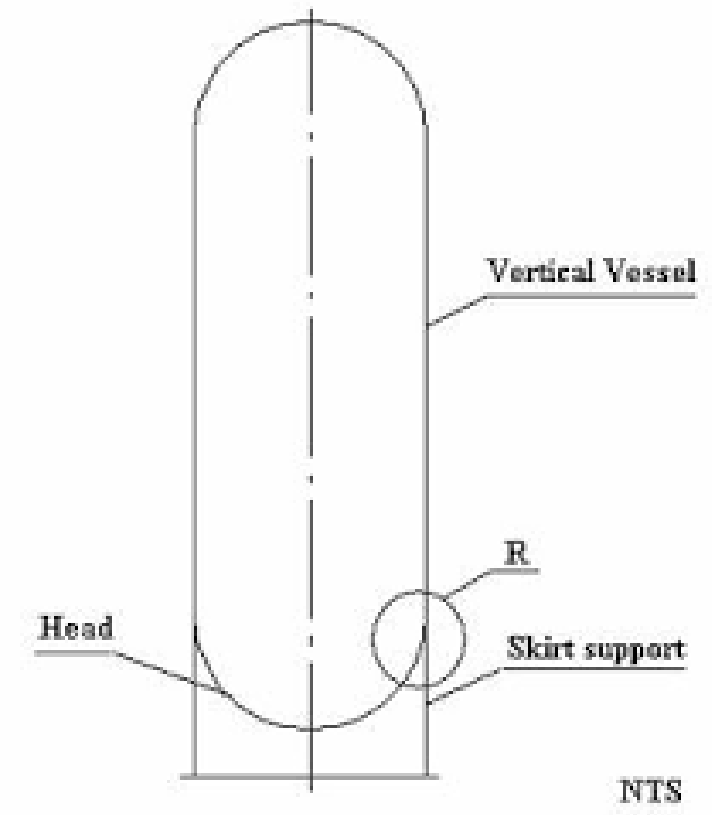
Vertical Vessel
R
Head
Skirt support
NTS

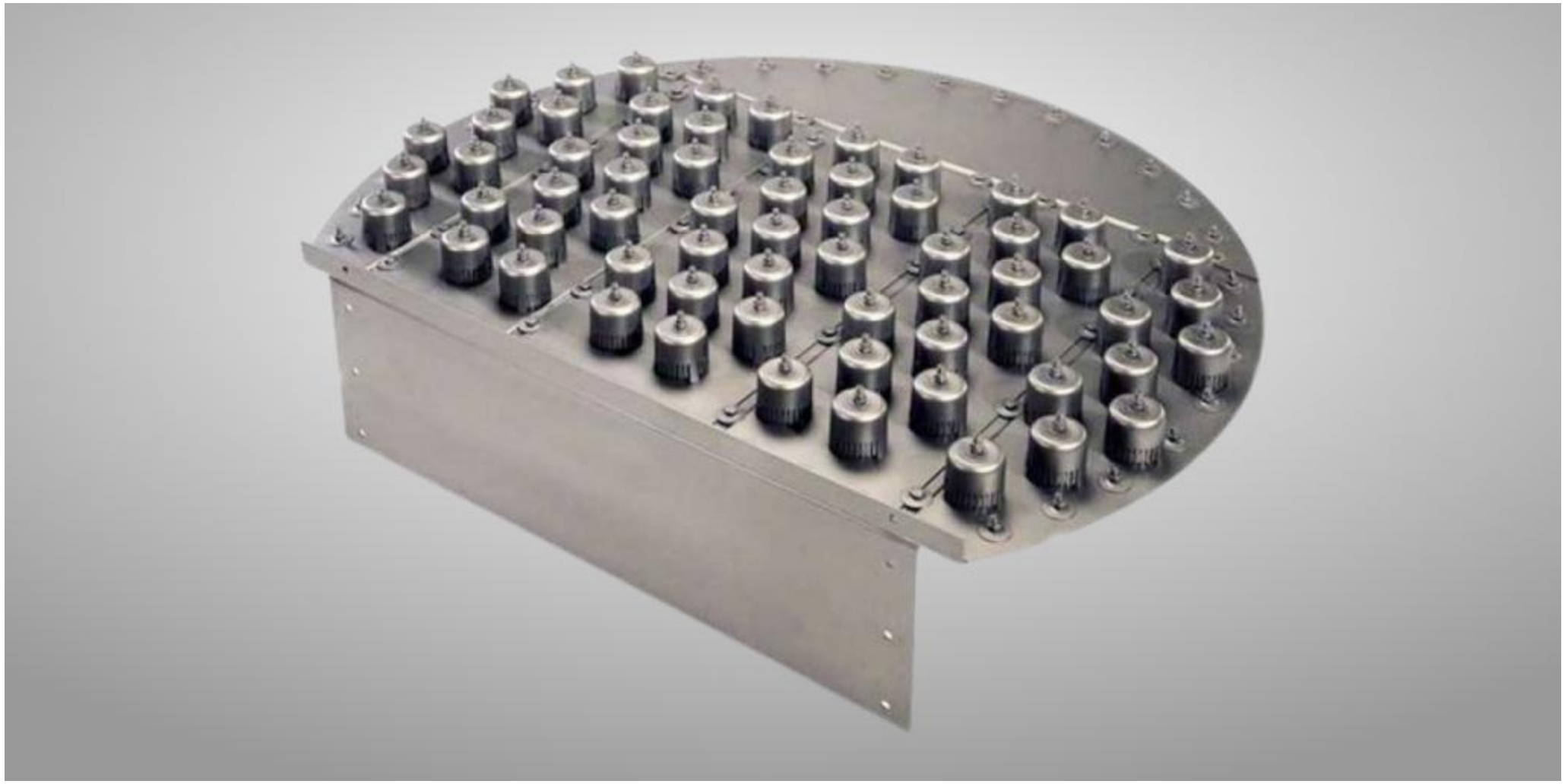

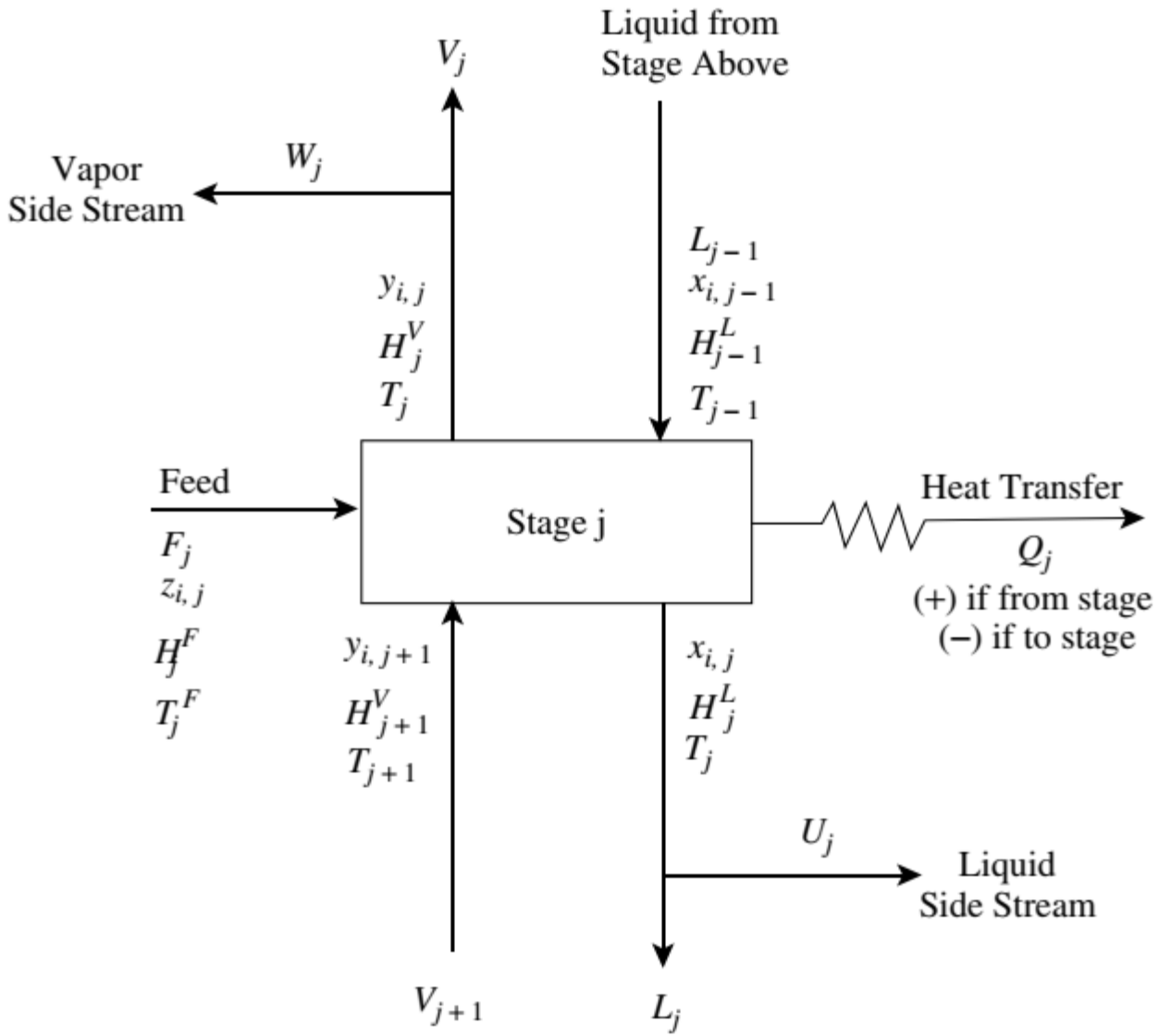

Figure 9.4 A general equilibrium stage for distillation. (From Smith R and Jobson M, 2000, *Distillation, Encyclopedia of Separation Science*, Academic Press; reproduced by permission).

where $z_{i,j}\, y_{i,j}, x_{i,j}$ = feed, vapor and liquid mole fractions for Stage j

F_j, V_j, L_j = feed, vapor and liquid molar flowrates for Stage j

W_j, U_j = vapor and liquid sidestreams for Stage j

H_F = molar enthalpy of the feed

H_j^V, H_j^L = vapor and liquid molar enthalpies for Stage j

Q_j = heat transfer from Stage j (negative for heat transfer to the stage)

$K_{i,j}$ = vapor–liquid equilibrium constant between x_i and y_i for Stage j

NC = number of components

The equations are similar to those of §5.7[1] and are referred to as MESH equations, after Wang and Henke [1].

1. *M* equations—*M*aterial balance for each component (*C* equations for each stage).

$$\boxed{\begin{aligned} M_{i,j} = {} & L_{j-1}x_{i,j-1} + V_{j+1}y_{i,j+1} + F_j z_{i,j} \\ & - (L_j + U_j)x_{i,j} - (V_j + W_j)y_{i,j} = 0 \end{aligned}} \tag{10-1}$$

2. *E* equations—phase-*E*quilibrium relation for each component (*C* equations for each stage), from (2-19).

$$\boxed{E_{i,j} = y_{i,j} - K_{i,j}x_{i,j} = 0} \tag{10-2}$$

where $K_{i,j}$ is the phase-equilibrium ratio or *K*-value.

3. *S* equations—mole-fraction *S*ummations (one for each stage),

$$\boxed{(S_y)_j = \sum_{i=1}^{C} y_{i,j} - 1.0 = 0} \tag{10-3}$$

$$\boxed{(S_x)_j = \sum_{i=1}^{C} x_{i,j} - 1.0 = 0} \tag{10-4}$$

4. *H* equation—energy balance (one for each stage).

$$\boxed{\begin{aligned} H_j = {} & L_{j-1}h_{L_{j-1}} + V_{j+1}h_{V_{j+1}} + F_j h_{F_j} \\ & - (L_j + U_j)h_{L_j} - (V_j + W_j)h_{V_j} - Q_j = 0 \end{aligned}} \tag{10-5}$$

where kinetic- and potential-energy changes are ignored.

A total material-balance equation can be used in place of (10-3) or (10-4). It is derived by combining these two equations and $\sum_j z_{i,j} = 1.0$ with (10-1) summed over the *C* components and over stages 1 through *j* to give

$$\boxed{L_j = V_{j+1} + \sum_{m=1}^{j}(F_m - U_m - W_m) - V_1} \tag{10-6}$$

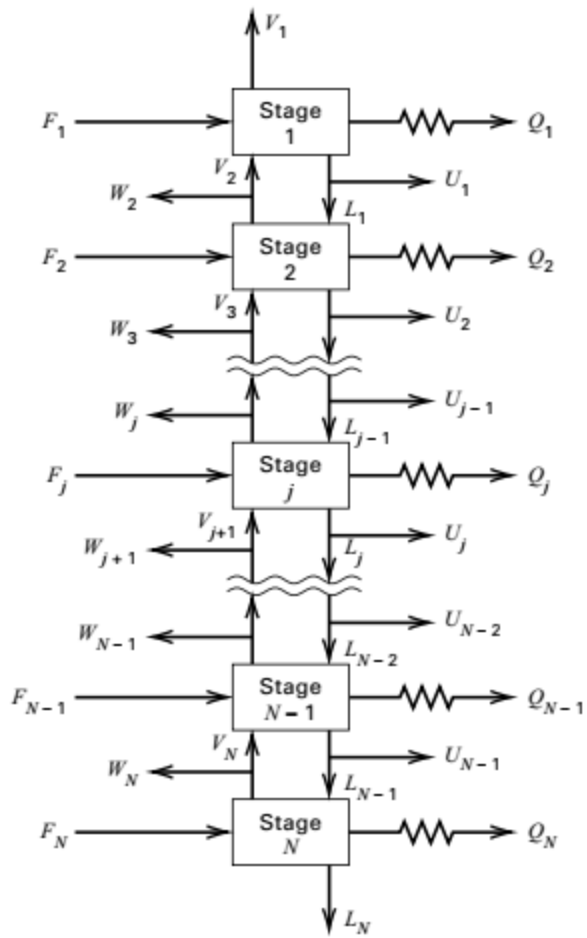

Figure 10.3 General countercurrent cascade of N stages.

$$A_j x_{i,j-1} + B_j x_{i,j} + C_j x_{i,j+1} = D_j \tag{10-7}$$

where

$$A_j = V_j + \sum_{m=1}^{j-1} (F_m - W_m - U_m) - V_1, \quad 2 \le j \le N \tag{10-8}$$

$$\begin{aligned} B_j = -\Bigg[& V_{j+1} + \sum_{m=1}^{j} (F_m - W_m - U_m) \\ & -V_1 + U_j + \left(V_j + W_j\right) K_{i,j} \Bigg], \quad 1 \le j \le N \end{aligned} \tag{10-9}$$

$$C_j = V_{j+1} K_{i,j+1}, \quad 1 \le j \le N - 1 \tag{10-10}$$

$$D_j = -F_j z_{i,j}, \quad 1 \le j \le N \tag{10-11}$$

$$
\begin{bmatrix}
B_1 & C_1 & 0 & 0 & 0 & \cdots & & & & \cdots & 0 \\
A_2 & B_2 & C_2 & 0 & 0 & \cdots & & & & \cdots & 0 \\
0 & A_3 & B_3 & C_3 & 0 & \cdots & & & & \cdots & 0 \\
\cdots & \cdots & & & & & & & & & \cdots \\
\cdots & & & & & & & & & & \cdots \\
\cdots & & & & & & & & & & \cdots \\
\cdots & & & & & & & & & & \cdots \\
\cdots & & & & & & & & & & \cdots \\
\cdots & & & & & & & & & & \cdots \\
0 & \cdots & & & & \cdots & 0 & A_{N-2} & B_{N-2} & C_{N-2} & 0 \\
0 & \cdots & & & & \cdots & 0 & 0 & A_{N-1} & B_{N-1} & C_{N-1} \\
0 & \cdots & & & & \cdots & 0 & 0 & 0 & A_N & B_N
\end{bmatrix}
\times
\begin{bmatrix}
x_{i,1} \\ x_{i,2} \\ x_{i,3} \\ \cdots \\ \cdots \\ \cdots \\ \cdots \\ \cdots \\ \cdots \\ x_{i,N-2} \\ x_{i,N-1} \\ x_{i,N}
\end{bmatrix}
=
\begin{bmatrix}
D_1 \\ D_2 \\ D_3 \\ \cdots \\ \cdots \\ \cdots \\ \cdots \\ \cdots \\ \cdots \\ D_{N-2} \\ D_{N-1} \\ D_N
\end{bmatrix}
\tag{10-12}
$$

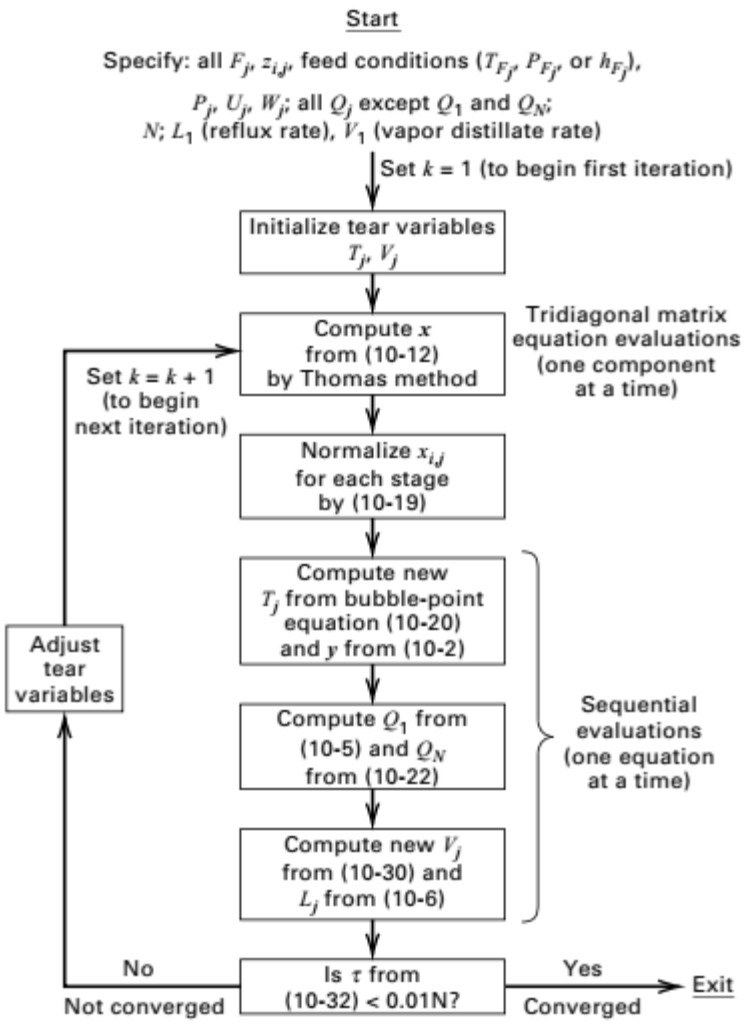

Figure 10.5 Algorithm for Wang–Henke BP method.

$$V_j = \frac{\gamma_{j-1} - \alpha_{j-1} V_{j-1}}{\beta_{j-1}} \tag{10-30}$$

A new set of V_j tear variables is computed by applying a modified energy balance obtained by combining (10-5) and (10-6) twice to eliminate L_{j-1} and L_j. After rearrangement,

$$\alpha_j V_j + \beta_j V_{j+1} = \gamma_j \tag{10-23}$$

where

$$\alpha_j = h_{L_{j-1}} - h_{V_j} \tag{10-24}$$

$$\beta_j = h_{V_{j+1}} - h_{L_j} \tag{10-25}$$

$$\begin{aligned}\gamma_j = &\left[\sum_{m=1}^{j-1} (F_m - W_m - U_m) - V_1\right]\left(h_{L_j} - h_{L_{j-1}}\right) \\ &+ F_j\left(h_{L_j} - h_{F_j}\right) + W_j\left(h_{V_j} - h_{L_j}\right) + Q_j\end{aligned} \tag{10-26}$$

iteration index. One convergence criterion is

$$\sum_{j=1}^{N} \left[\frac{T_j^{(k)} - T_j^{(k-1)}}{T_j^{(k)}}\right]^2 + \sum_{j=1}^{N} \left[\frac{V_j^{(k)} - V_j^{(k-1)}}{T_j^{(k)}}\right]^2 \leq \epsilon \tag{10-31}$$

where T is an absolute temperature and ϵ is some prescribed tolerance. However, Wang and Henke suggest that the following simpler criterion, which is based on successive sets of T_j values only, is adequate.

$$\tau = \sum_{j=1}^{N} \left[T_j^{(k)} - T_j^{(k-1)}\right]^2 \leq 0.01N \tag{10-32}$$

Short cut design

$$v_T = f\ K_T\ (\frac{\rho_L - \rho_v}{\rho_v})^{0.5}$$

$$K_T = \left(\frac{\sigma}{20}\right)^{0.2} \exp[-2.979 - 0.717 \ln F_{LV} - 0.0865(\ln F_{LV})^2 + 0.997 \ln H_T - 0.07973 \ln F_{LV} \ln H_T + 0.256(\ln H_T)^2] \quad (9.63)$$

where K_T = parameter for terminal velocity ($m \cdot s^{-1}$)
σ = surface tension
($mN \cdot m^{-1} = mJ \cdot m^{-2} = dyne \cdot cm^{-1}$)
H_T = tray spacing (m)

$$F_{LV} = \left(\frac{M_L L}{M_V V}\right)\left(\frac{\rho_V}{\rho_L}\right)^{0.5} \tag{9.62}$$

where F_{LV} = liquid–vapor flow parameter (–)
L = liquid molar flowrate (kmol·s^{-1})
V = vapor molar flowrate (kmol·s^{-1})
M_L = liquid molar mass (kg·kmol^{-1})
M_V = vapor molar mass (kg·kmol^{-1})
ρ_V = vapor density (kg·m^{-3})
ρ_L = liquid density (kg·m^{-3})

$$\text{Diameter} = \left(\frac{4 M_V V}{0.9 \times 0.8 \times \pi \rho_V v_T}\right)^{0.5}$$

Table 9.7 Physical properties of distillation and bottoms compositions.

	Distillate	Bottoms
M_L (kg·kmol^{-1})	57.0	87.5
M_V (kg·kmol^{-1})	55.6	80.3
ρ_L (kg·m^{-3})	476	483
ρ_V (kg·m^{-3})	34.9	41.2
σ (mN·m^{-1})	4.6	3.7

$$\text{Diameter} = \left(\frac{4M_V V}{0.9 \times 0.8 \times \pi \rho_V v_T}\right)^{0.5}$$

At the top of the column:

$$\text{Diameter} = \left(\frac{4 \times 55.6 \times 1225.4/3600}{0.9 \times 0.8 \times \pi \times 34.9 \times 0.143}\right)^{0.5}$$

$$= 2.59 \text{ m}$$

At the bottom of the column:

$$\text{Diameter} = \left(\frac{4 \times 80.3 \times 1225.4/3600}{0.9 \times 0.8 \times \pi \times 41.2 \times 0.0852}\right)^{0.5}$$

$$= 3.71 \text{ m}$$

Example 9.1 A distillation column operating at 14 bar with a saturated liquid feed of 1000 kmol·h^{-1} with composition given in Table 9.1 is to be separated into an overhead product that recovers 99% of the *n*-butane overhead and 95% of the *i*-pentane in the bottoms. Relative volatilities are also given in Table 9.1.

Table 9.1 Distillation column feed and relative volatilities.

Component	f_i (kmol·h^{-1})	α_{ij}
Propane	30.3	16.5
i-Butane	90.7	10.5
n-Butane (LK)	151.2	9.04
i-Pentane (HK)	120.9	5.74
n-Pentane	211.7	5.10
n-Hexane	119.3	2.92
n-Heptane	156.3	1.70
n-Octane	119.6	1.00

a. Calculate the minimum number of stages using the Fenske Equation.
b. Estimate the compositions of the overhead and bottoms products using the Fenske Equation.
c. Calculate the minimum reflux ratio using the Underwood Equations.